MASONITE

VISTAGRANDE® 26 x 64 FLUSH GLAZED 6'8"

MASONITE™ SPEC*

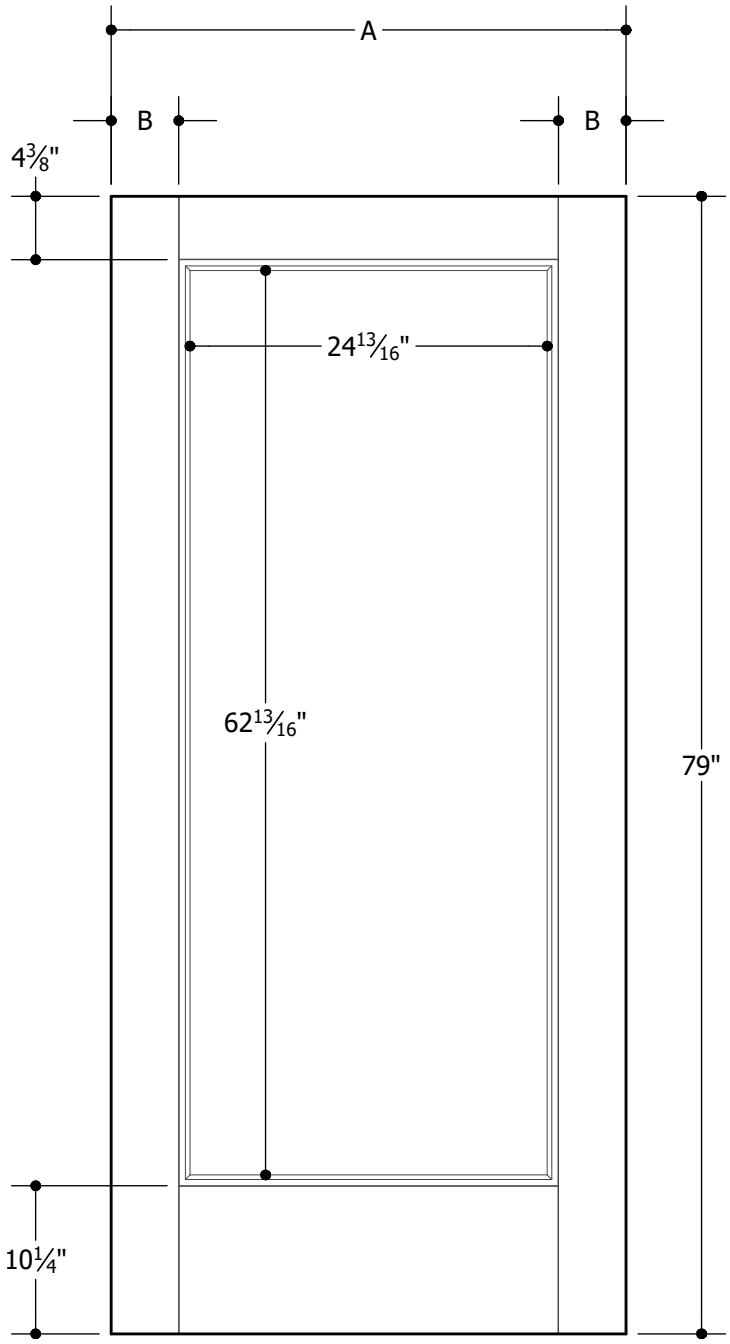

6'8"	A	35-3/4"	3'0"
	B	4-11/16"	

MASONITE

VISTAGRANDE® 22 x 64 FLUSH GLAZED 6'8"

MASONITE™ SPEC*

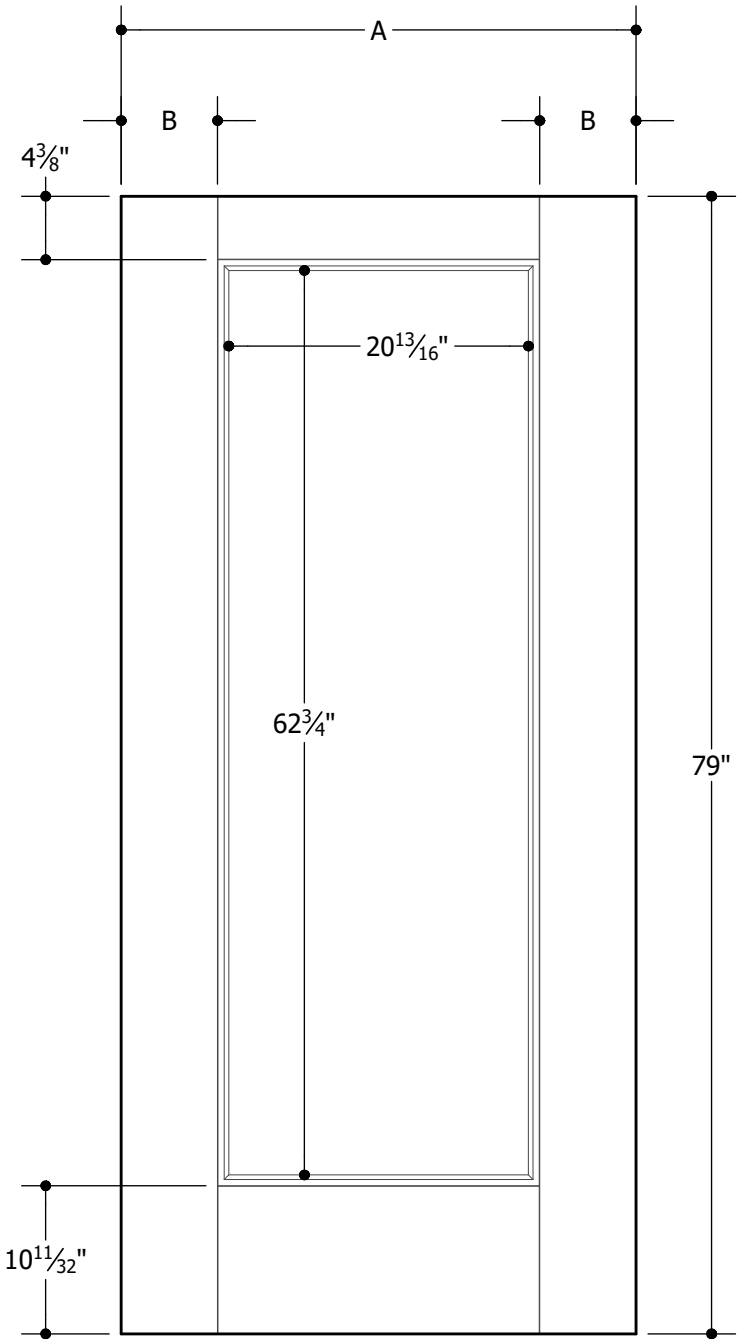

6'8"	A	31-3/4"	2'8"
	B	4-11/16"	
6'8"	A	33-3/4"	2'10"
	B	5-11/16"	
6'8"			3'0"
	A	35-3/4"	
	B	6-11/16"	

Note:

1. Overall Length and Width Dimensions are +/- 1/16 inch

*Available as Prem Spec

www.masonite.com

© 2017 Masonite International Corporation. All Rights Reserved.
Our continuing program of product improvement makes specifications, design and product detail subject to change without notice.

Filename: TM-VG-2264 GL-68 001
Revision: A
Date: 01-23-2017
Section XX XX.X.X

MASONITE

VISTAGRANDE® 20 x 64 FLUSH GLAZED 6'8"

MASONITE™ SPEC*

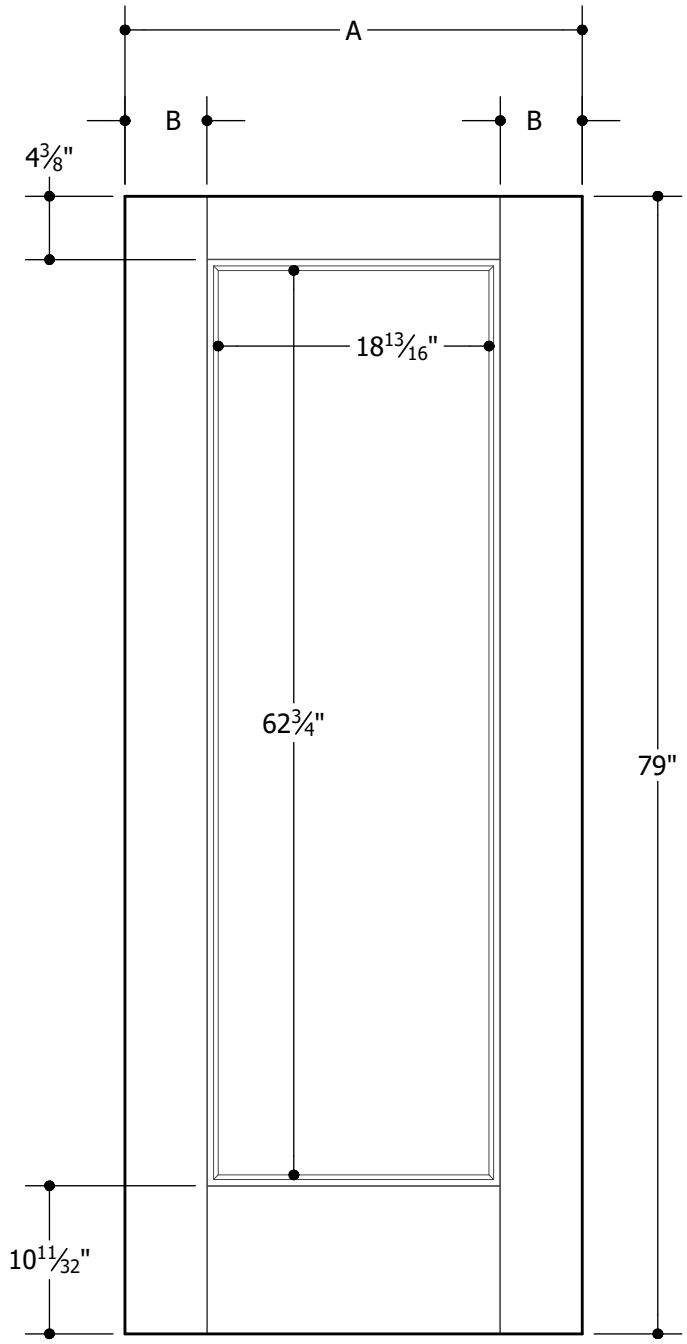

6'8"	A	29-3/4"	2'6"
	B	4-11/16"	
6'8"	A	31-3/4"	2'8"
	B	5-11/16"	

MASONITE

VISTAGRANDE® 14 x 64 FLUSH GLAZED 6'8"

MASONITE™ SPEC*

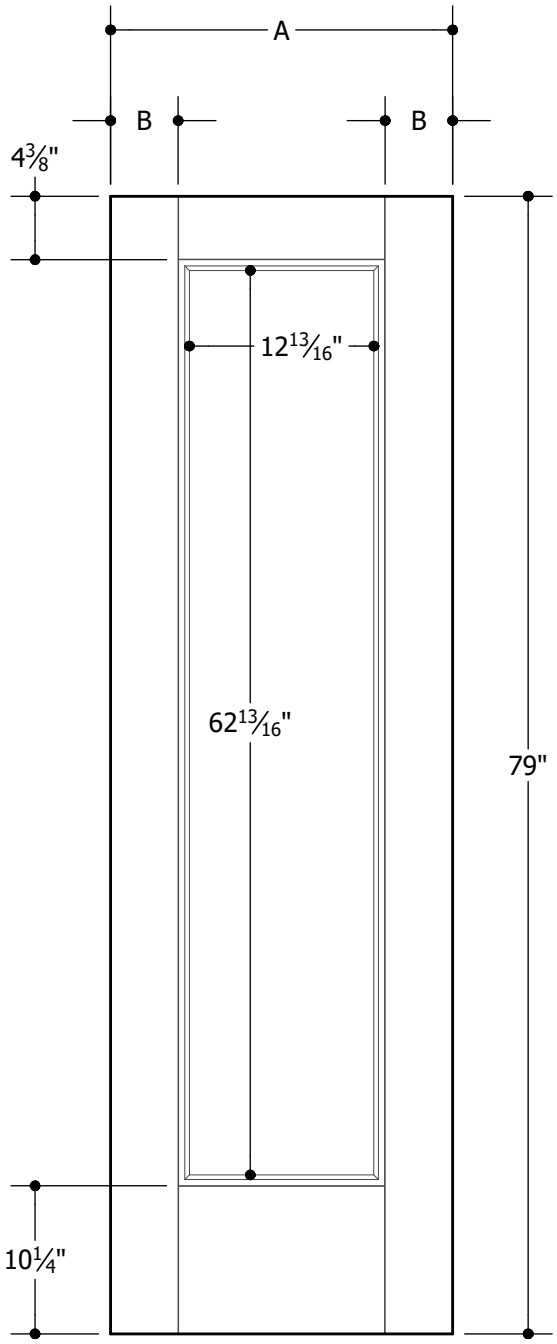

6'8"	A	23-3/4"	2'0"
	B	4-11/16"	

MASONITE

VISTAGRANDE® 7 x 64 FLUSH GLAZED 6'8"

MASONITE™ SPEC*

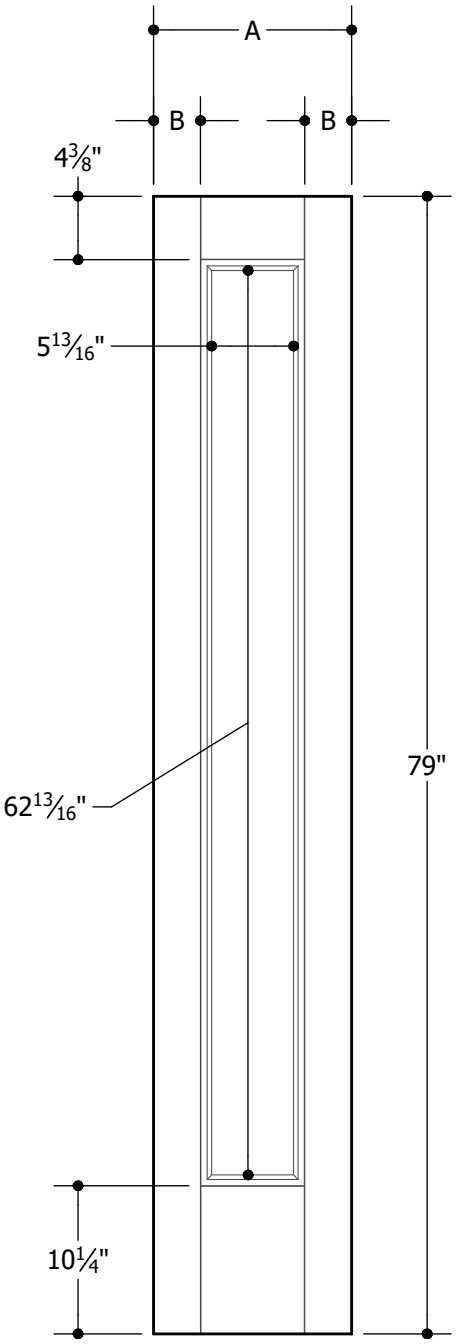

6'8"	A	10-3/8"	10"
	B	1-1/2"	
6'8"	A	11-7/8"	1'0"
	B	2-1/4"	
6'8"	A	13-7/8"	1'2"
	B	3-1/4"	

Note:

1. Overall Length and Width Dimensions are +/- 1/16 inch

*Available as Prem Spec

www.masonite.com

© 2017 Masonite International Corporation. All Rights Reserved.
Our continuing program of product improvement makes specifications, design and product detail subject to change without notice.

Filename: TM-VG-0764 GL-68 005
Revision: A
Date: 01-23-2017
Section XX XX.X.X

MASONITE

VISTAGRANDE® 26 x 80 FLUSH GLAZED 8'0"

MASONITE™ SPEC*

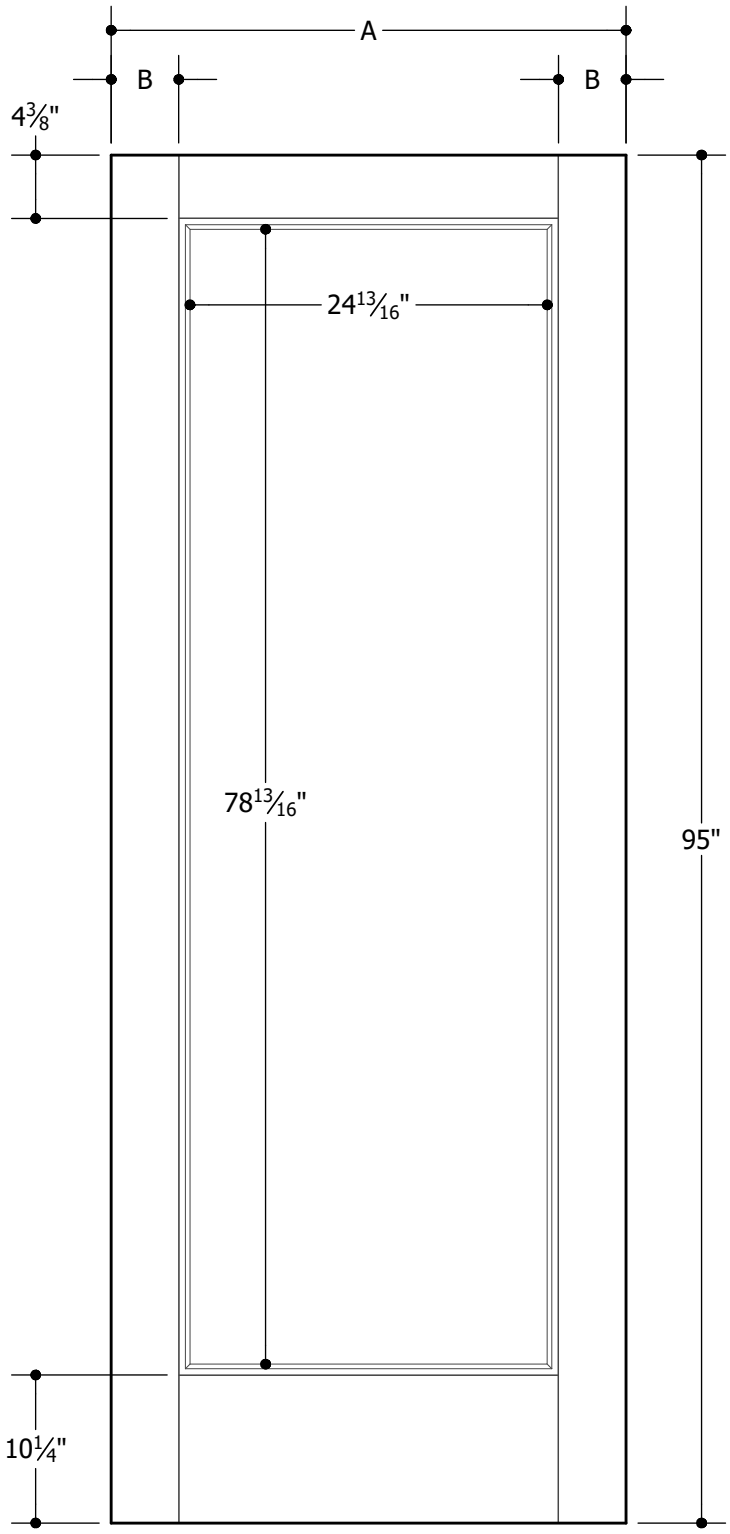

8'0"	A	35-3/4"	3'0"
	B	4-11/16"	

MASONITE

VISTAGRANDE® 22 x 80 FLUSH GLAZED 8'0"

MASONITE™ SPEC*

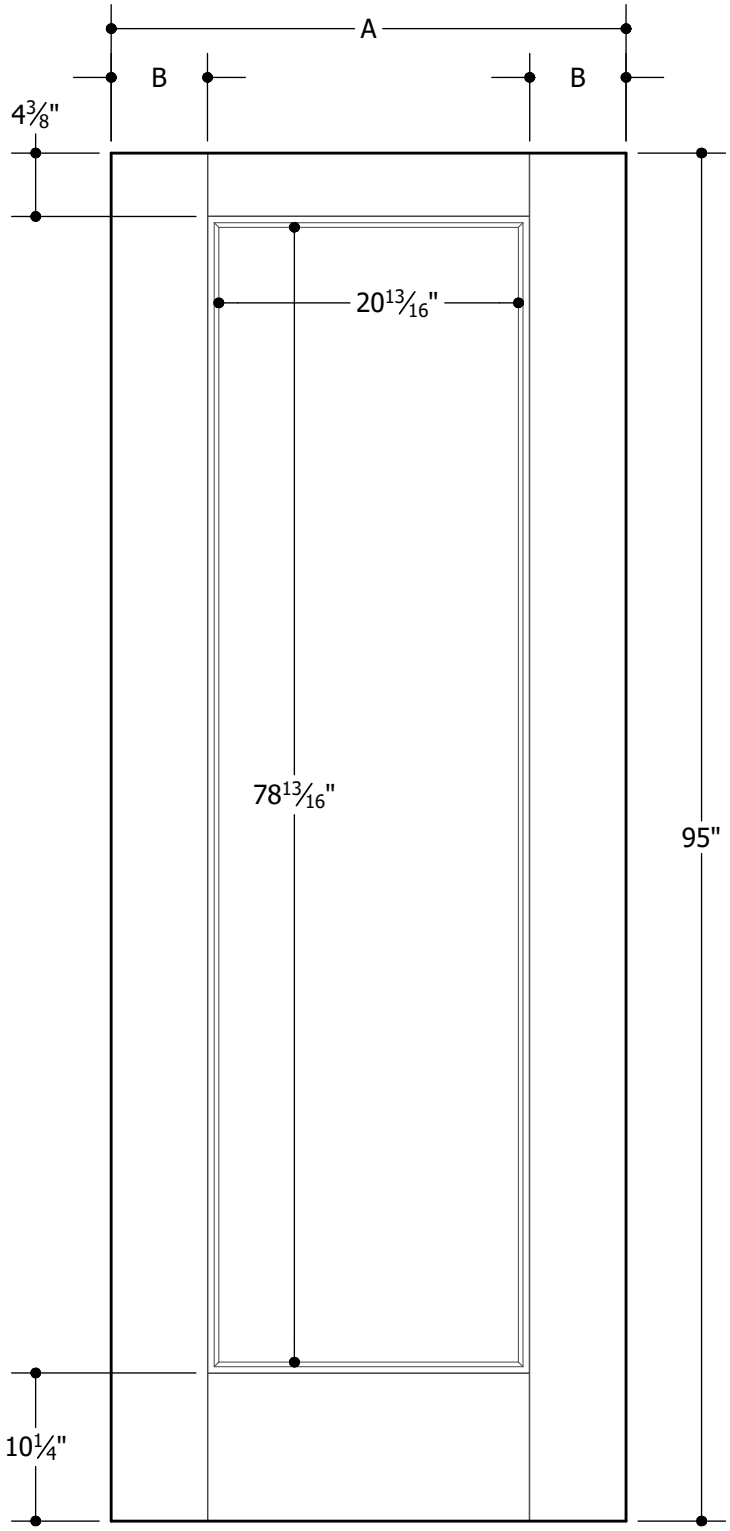

8'0"	A	31-3/4"	2'8"
	B	4-11/16"	
8'0"	A	33-3/4"	2'10"
	B	5-11/16"	
8'0"			3'0"
	A	35-3/4"	
	B	6-11/16"	

Note:

1. Overall Length and Width Dimensions are +/- 1/16 inch

*Available as Prem Spec

www.masonite.com

© 2017 Masonite International Corporation. All Rights Reserved.
Our continuing program of product improvement makes specifications, design and product detail subject to change without notice.

Filename: TM-VG-2280 GL-80 007
Revision: A
Date: 01-23-2017
Section XX XX.X.X

MASONITE

VISTAGRANDE® 20 x 80 FLUSH GLAZED 8'0"

MASONITE™ SPEC*

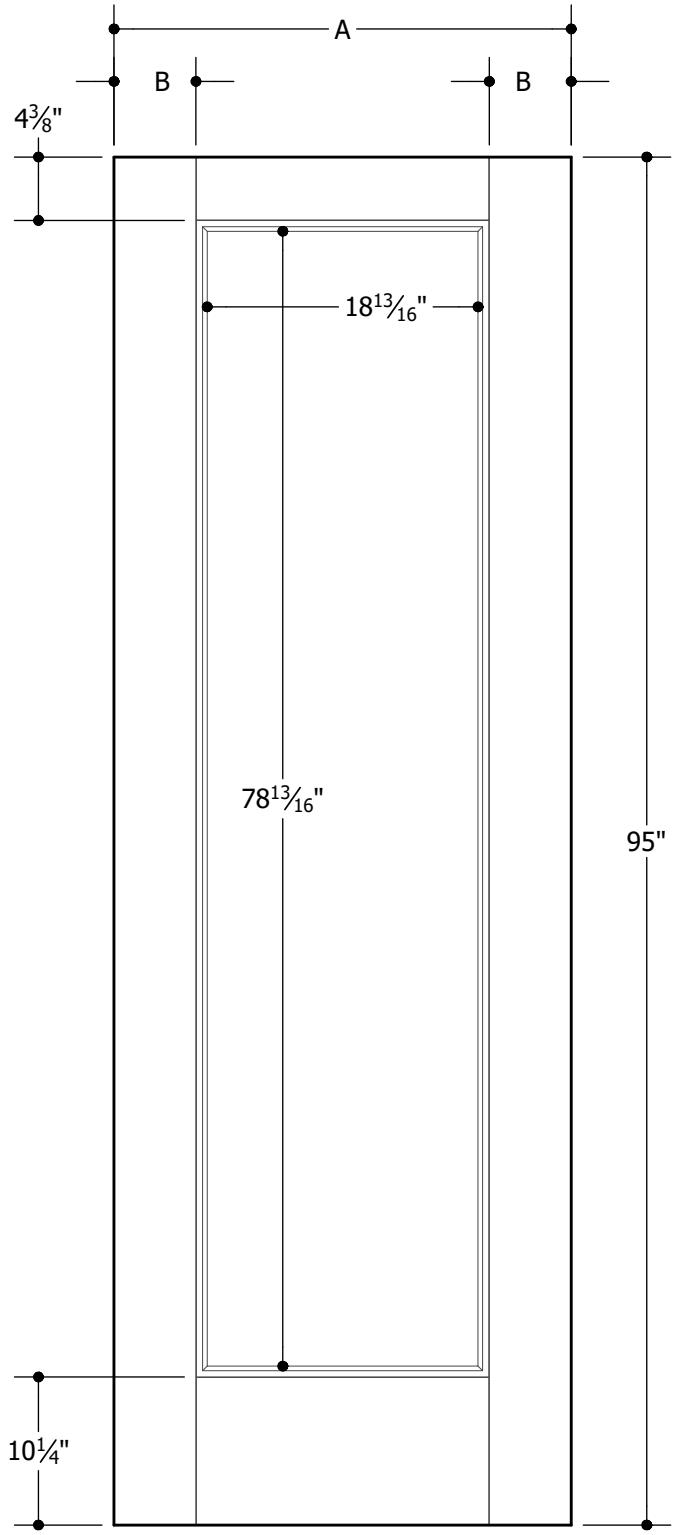

8'0"	A	29-3/4"	2'6"
	B	4-11/16"	
8'0"	A	31-3/4"	2'8"
	B	5-11/16"	

MASONITE

VISTAGRANDE® 14 x 64 FLUSH GLAZED 6'8"

MASONITE™ SPEC*

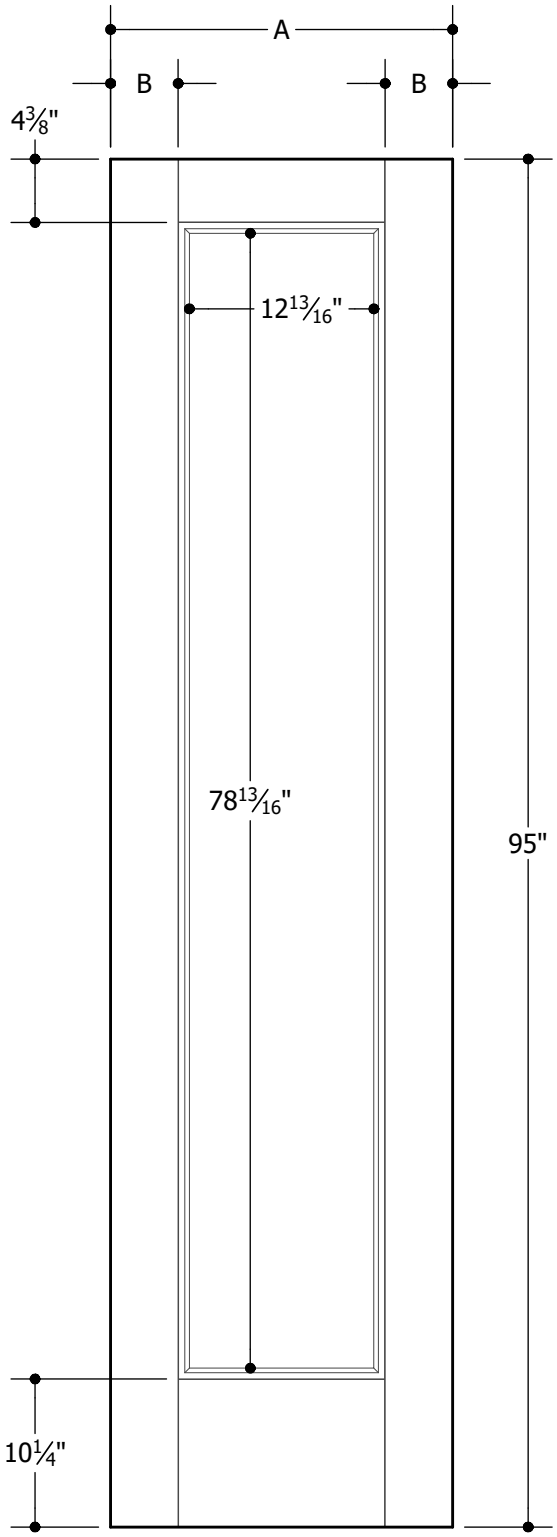

8'0"	A	23-3/4"	2'0"
	B	4-11/16"	

MASONITE

VISTAGRANDE® 7 x 64 FLUSH GLAZED 6'8"

MASONITE™ SPEC*

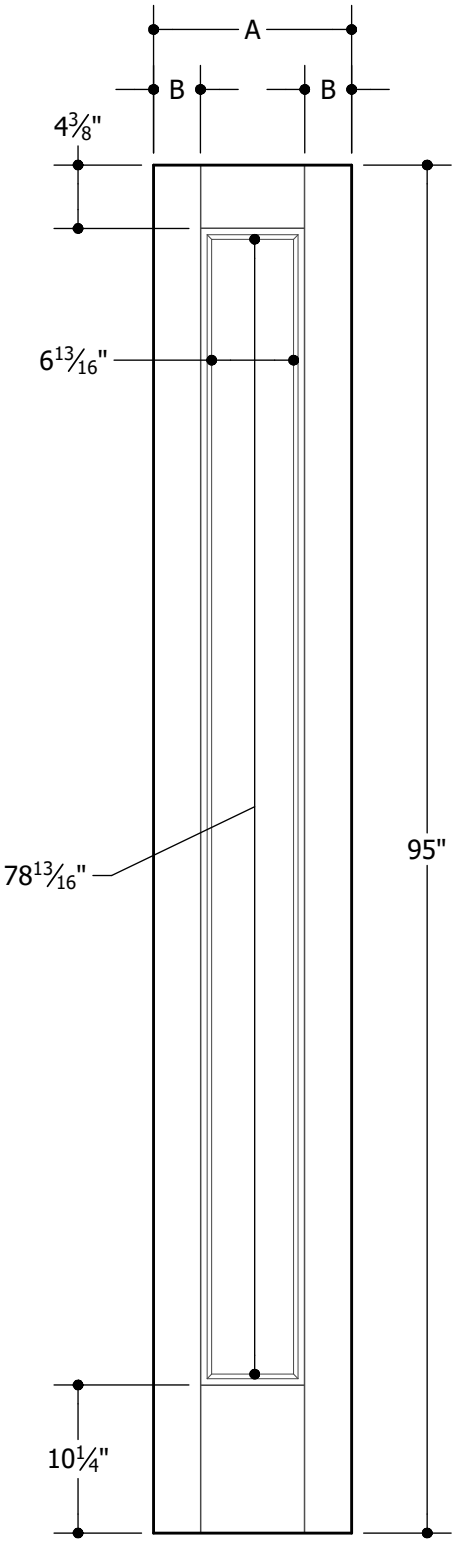

8'0"	A	11-7/8"	1'0"
	B	1-3/4"	
8'0"	A	13-7/8"	1'2"
	B	2-3/4"	

MASONITE

VISTAGRANDE® 26 x 36 FLUSH GLAZED 6'8"

MASONITE™ SPEC*

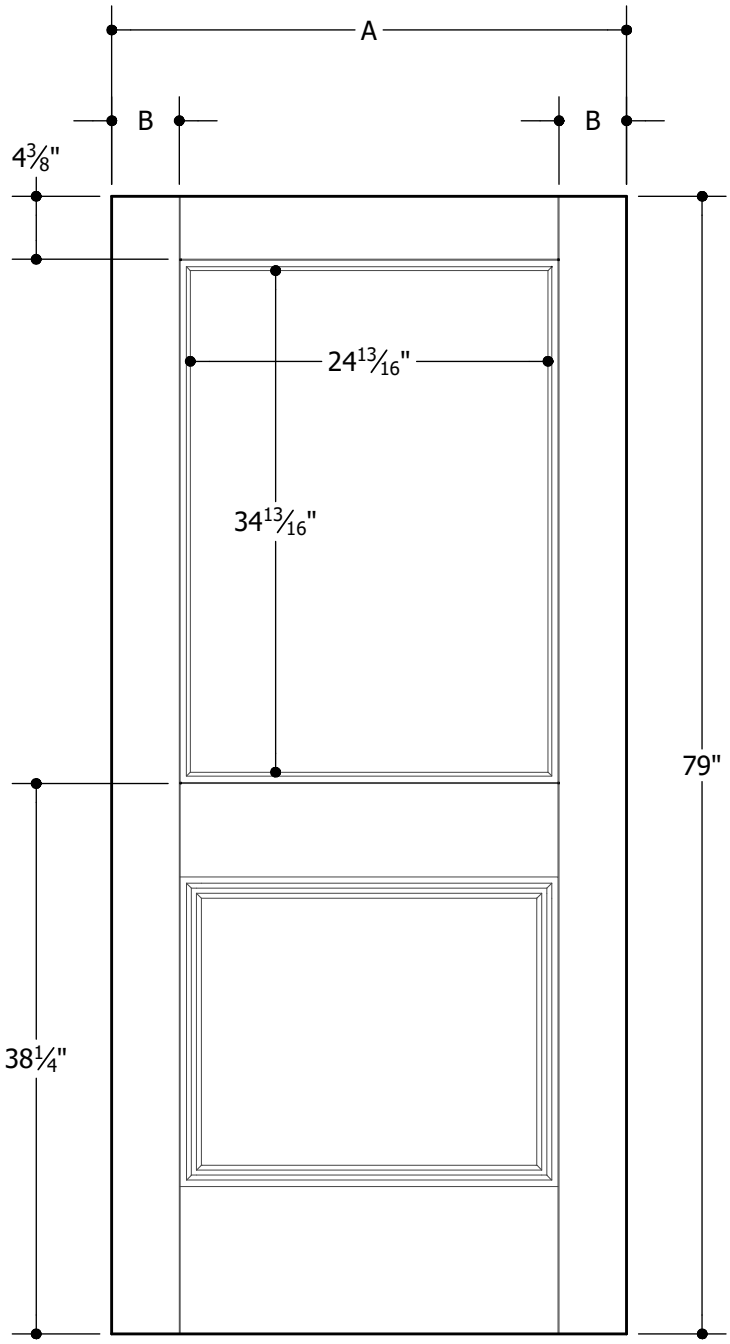

6'8"	A	35-3/4"	3'0"
	B	4-11/16"	

MASONITE

VISTAGRANDE® 22 x 36 FLUSH GLAZED 6'8"

MASONITE™ SPEC*

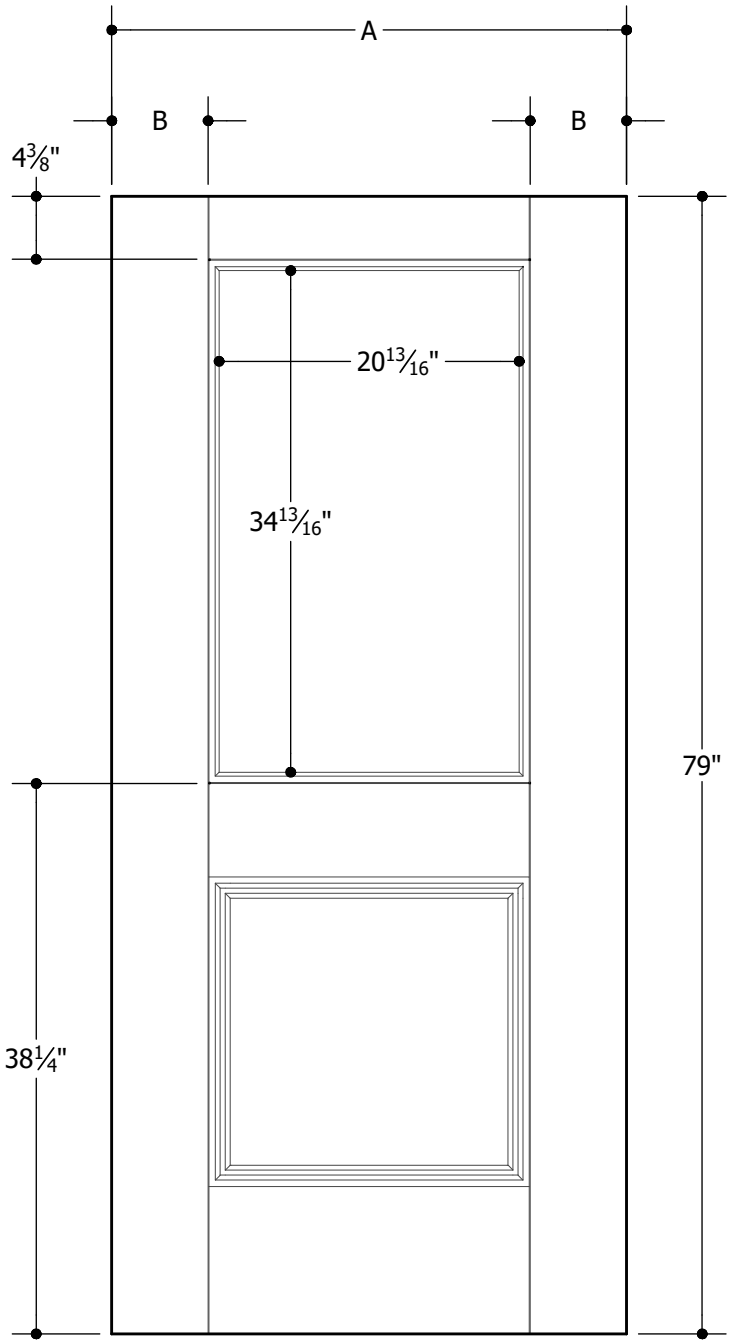

6'8"	A	31-3/4"	2'8"
	B	4-11/16"	
6'8"	A	33-3/4"	2'10"
	B	5-11/16"	
6'8"			3'0"
	A	35-3/4"	
	B	6-11/16"	

Note:

1. Overall Length and Width Dimensions are +/- 1/16 inch

*Available as Prem Spec

www.masonite.com

© 2017 Masonite International Corporation. All Rights Reserved.
Our continuing program of product improvement makes specifications, design and product detail subject to change without notice.

Filename: TM-VG-2236 GL-68 020
Revision: A
Date: 01-23-2017
Section XX XX.X.X

MASONITE

VISTAGRANDE® 26 x 48 FLUSH GLAZED 6'8"

MASONITE™ SPEC*

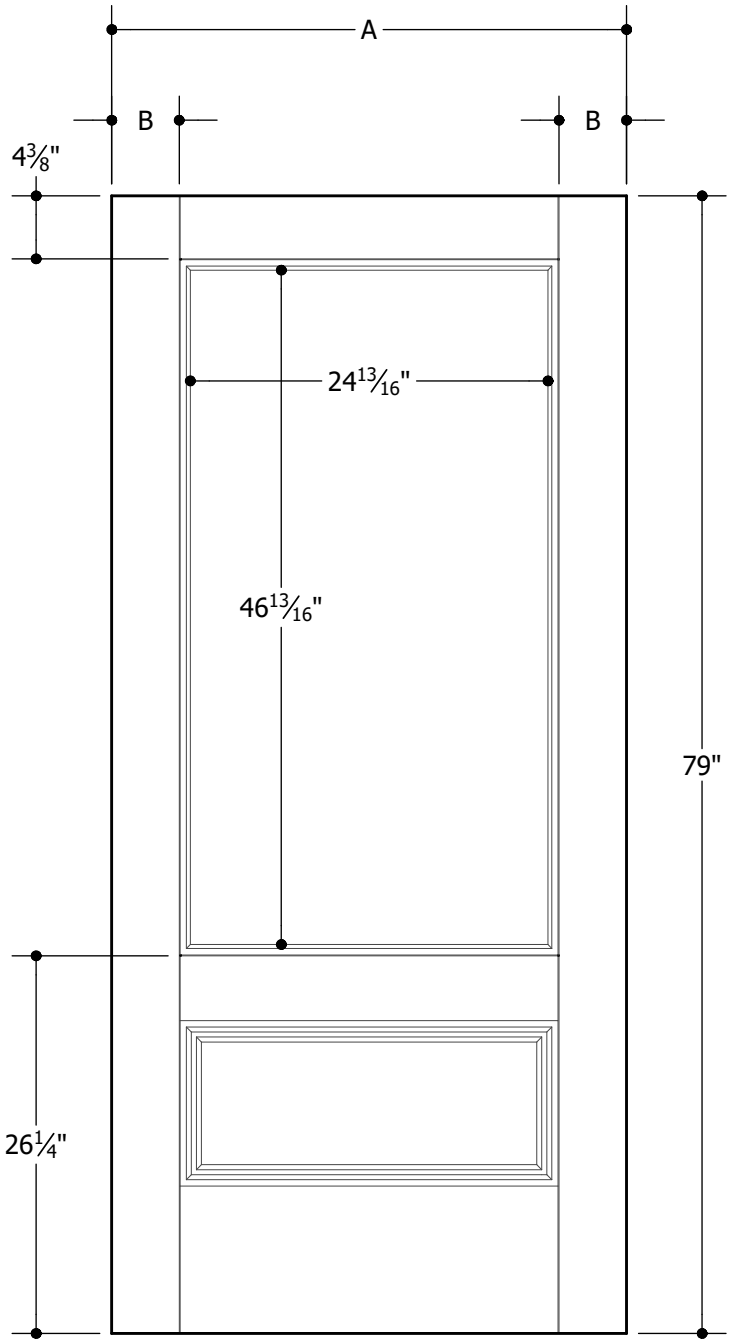

6'8"	A	35-3/4"	3'0"
	B	4-11/16"	

MASONITE

VISTAGRANDE® 22 x 48 FLUSH GLAZED 6'8"

MASONITE™ SPEC*

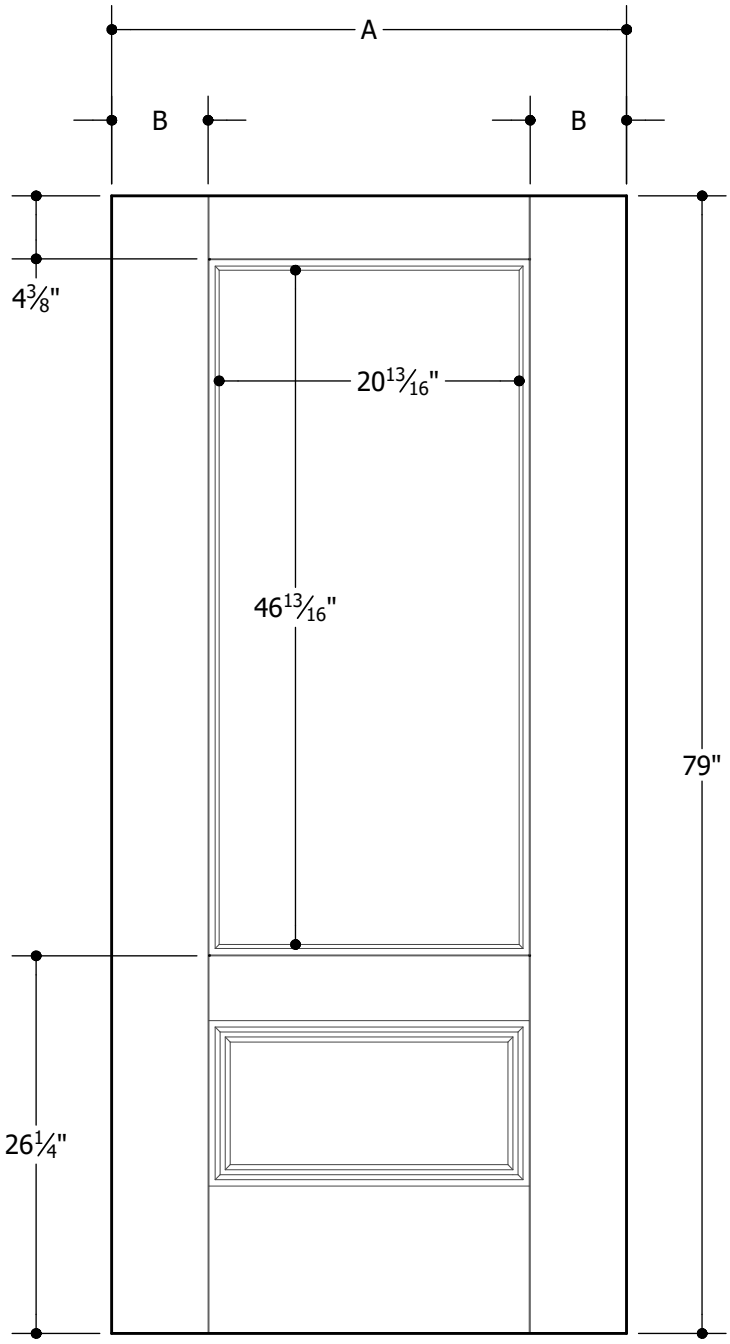

6'8"	A	31-3/4"	2'8"
	B	4-11/16"	
6'8"	A	33-3/4"	2'10"
	B	5-11/16"	
6'8"	A	35-3/4"	3'0"
	B	6-11/16"	

Note:

1. Overall Length and Width Dimensions are +/- 1/16 inch

*Available as Prem Spec

www.masonite.com

© 2017 Masonite International Corporation. All Rights Reserved.
Our continuing program of product improvement makes specifications, design and product detail subject to change without notice.

Filename: TM-VG-2248 GL-68 024
Revision: A
Date: 01-23-2017
Section XX XX.X.X

MASONITE

VISTAGRANDE® 20 x 48 FLUSH GLAZED 6'8"

MASONITE™ SPEC*

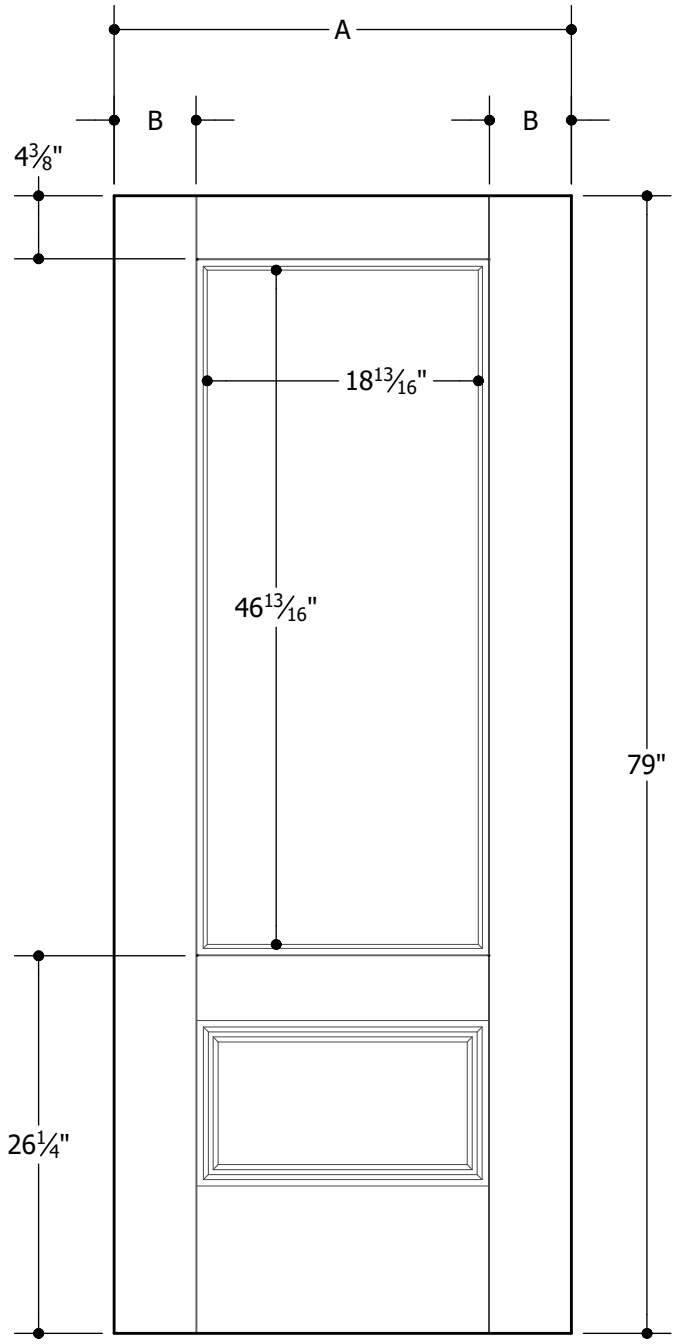

6'8"	A	29-3/4"	2'6"
	B	4-11/16"	
6'8"	A	31-3/4"	2'8"
	B	5-11/16"	

MASONITE

VISTAGRANDE® 26 x 64 FLUSH GLAZED 8'0"

MASONITE™ SPEC*

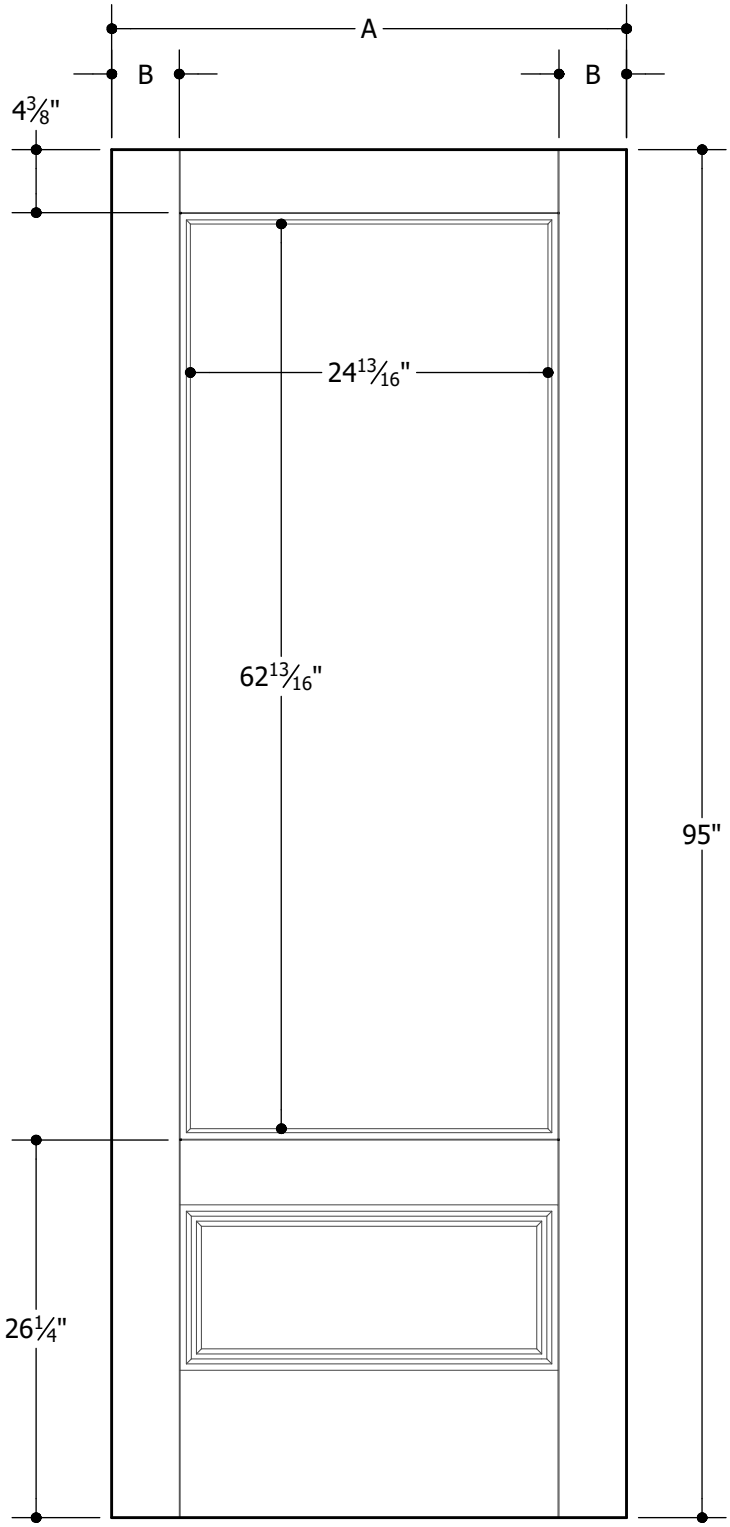

8'0"	A	35-3/4"	3'0"
	B	4-11/16"	

MASONITE

VISTAGRANDE® 22 x 64 FLUSH GLAZED 8'0"

MASONITE™ SPEC*

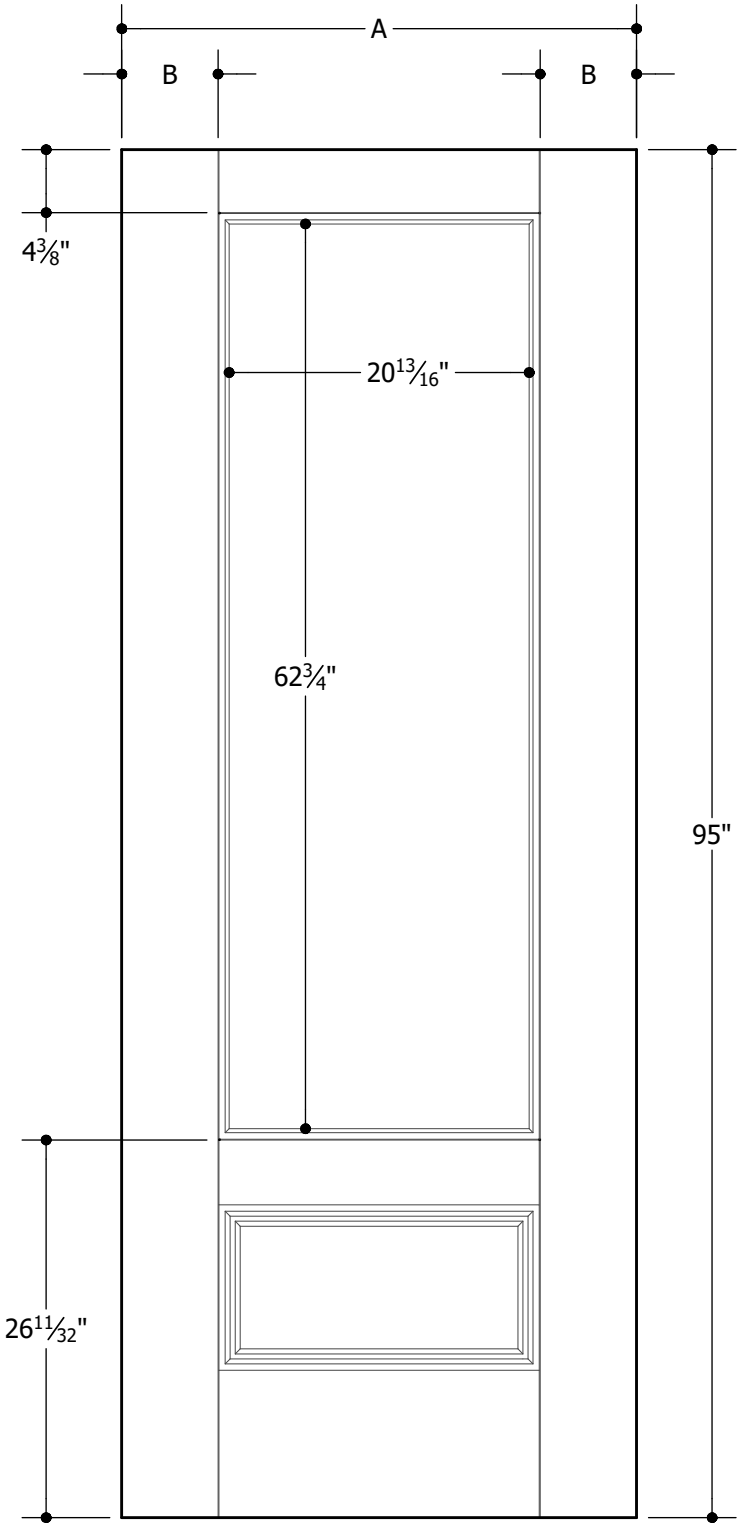

8'0"	A	31-3/4"	2'8"
	B	4-11/16"	
8'0"	A	33-3/4"	2'10"
	B	5-11/16"	
8'0"	A	35-3/4"	3'0"
	B	6-11/16"	

Note:

1. Overall Length and Width Dimensions are +/- 1/16 inch

*Available as Prem Spec

www.masonite.com

© 2017 Masonite International Corporation. All Rights Reserved.
Our continuing program of product improvement makes specifications, design and product detail subject to change without notice.

Filename: TM-VG-2264 GL-80 027
Revision: A
Date: 01-23-2017
Section XX XX.X.X

MASONITE

VISTAGRANDE® 20 x 64 FLUSH GLAZED 8'0"

MASONITE™ SPEC*

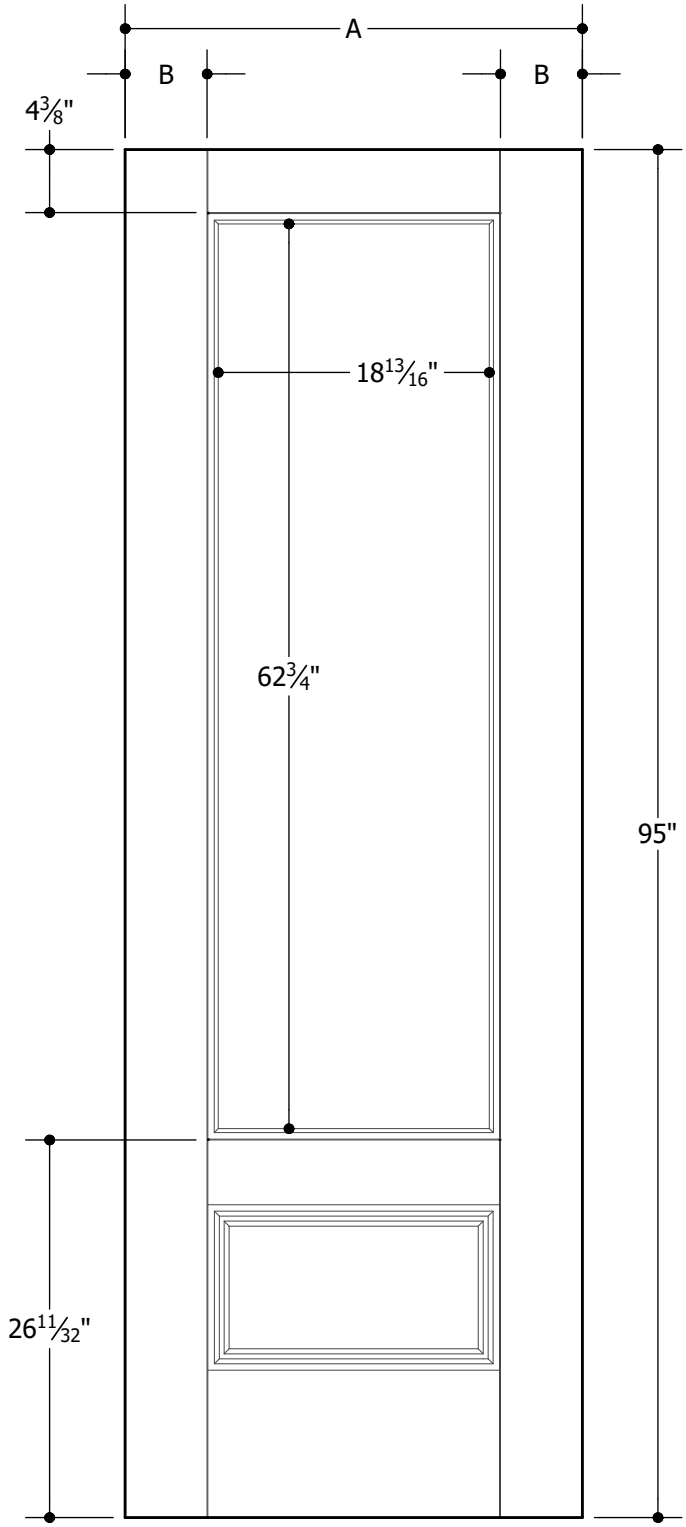

8'0"	A	29-3/4"	2'6"
	B	4-11/16"	
8'0"	A	31-3/4"	2'8"
	B	5-11/16"	

MASONITE

VISTAGRANDE® 08 x 48 FLUSH GLAZED SIDELITE 6'8"

MASONITE™ SPEC*

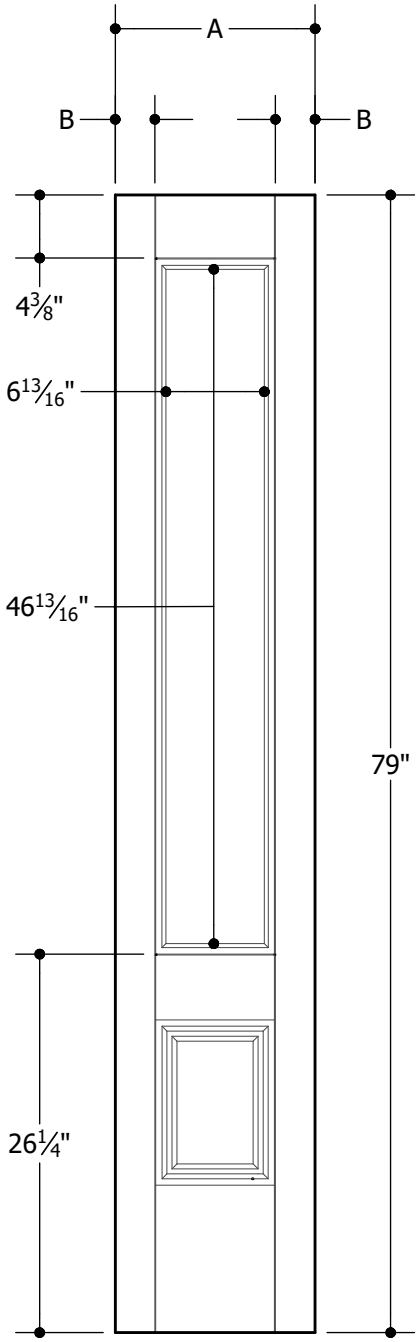

6'8"	A	11-7/8"	1'0"
	B	1-3/4"	
6'8"	A	13-7/8"	1'2"
	B	2-3/4"	

MASONITE

VISTAGRANDE® 08 x 48 FLUSH GLAZED SIDELITE 8'0"

MASONITE™ SPEC*

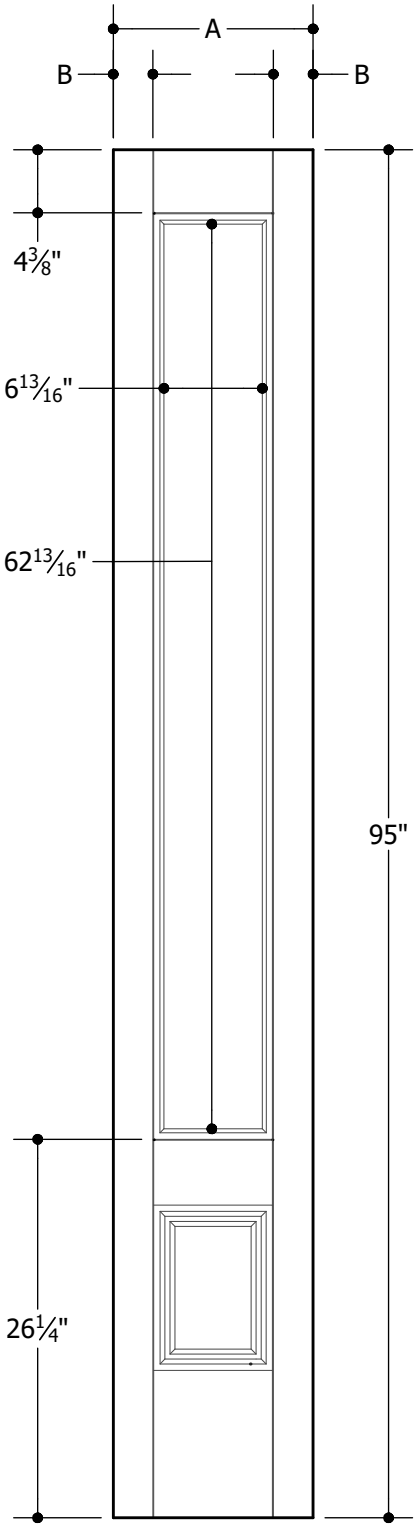

8'0"	A	11-7/8"	1'0"
	B	1-3/4"	
8'0"	A	13-7/8"	1'2"
	B	2-3/4"	